High Power Fiber to Free Space Isolator (HPMFSI Series)

Rev 11

The High Power Polarization Maintaining Isolator is characterized with low insertion loss, high isolation, high power handling, high return loss, excellent environmental stability and reliability. It is ideal for fiber laser and instrumentation applications.

Specifications

Parameter	Unit	Value
Center Wavelength (λc)	nm	1064
Typ. Peak Isolation	dB	35
Min. Isolation, 23 ℃, λc	dB	28
Max. Insertion Loss, 23 ℃	dB	0.5
Min. Extinction Ratio	dB	20
Min. Return Loss	dB	50
Max. Average Optical Power	W	20
Max. Peak Power for ns Pulse	KW	10
Max. Tensile Load	N	5
Fiber Type (input port)		PM 980 panda fiber
Fiber Type (output port)		Free Space
Output beam size(1/e^2)	mm	~5

Package Dimensions

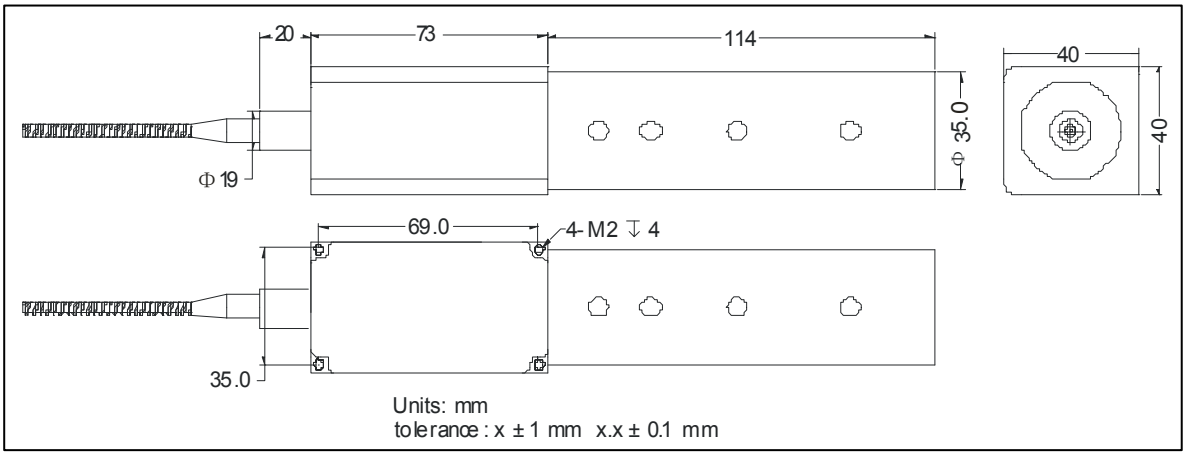

Ordering Information

HPMFSI-①①-②②-③-④-⑤-⑥-⑦

①①: Wavelength	②②: Handling Power	③: Connector Type	④: Fiber Jacket
06 - 1064 nm	03 - 3 W	N - None	B - 250 μm Panda fiber
SS - Specify	10 -10 W		L - 900 μm loose tube
	20 - 20 W		S - Specify
	SS - Specify		

⑤: Fiber Length	⑥: Working Axis	⑦: Power Type
Q - 0.75 m	F - Fast axis blocked	P - Pulse Application
S - Specify	B - Both axis working	C - Continuous Wave