INPHENIX

Super-Luminescent Light Emitting Diode Device

IPSDD1502 (1550nm)

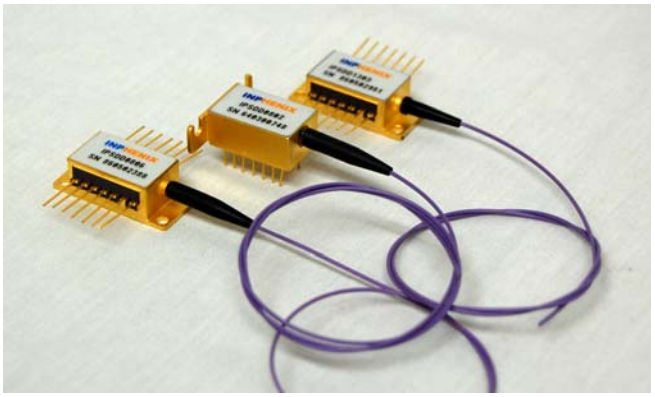

Features

- Wide Optical Bandwidth
- Very Low Spectral Ripple
- High Output Power in SM/or PM Fiber

Applications

- Broadband Light Source for Insertion Loss Test
- Distributed Fiber Optic Sensor (FOS)
- Biomedical Imaging Device
- OCT Diagnostic System
- Un-cooled Sensor System

Device Specifications

Parameter	Symbol	Min.	Typ.	Max.	Unit
Central Wavelength	λ_c	1520	1550	1590	nm
3dB Bandwidth	$\Delta\lambda_{3dB}$	50	55	-	nm
Output Power in SM Fiber	P_o	4	5	-	mW
Spectral Modulation Depth$_{p-p}$	Δ	-	0.2	0.3	dB
Operating Current	I_F	-	200	300	mA
Back Facet Monitor	Available upon request				

Absolute Maximum Ratings

Parameter	Min.	Max.	Unit
Operating Temperature	– 20	70	°C
Storage Temperature	– 40	85	°C
TEC Drive Current	-	1.5	A
TEC Drive Voltage	-	3.6	V
Maximum Current	350		mA
Thermistor Resistance	10kΩ @ 25°C		
SLD Chip Temperature Setting	25°C		
Fiber Type	SMF/PMF/MMF		
Fiber Jacket	250µm tight buffer with 900µm loose tube		
Package	14-pin DIL/14-pin BUT/8-pin BUT		
Lead Solder Temperature	260°C for 10 Seconds		

All information contained herein is believed to be accurate and is subject to change without notification. No responsibility is assumed. Please contact InPhenix for more information. InPhenix and the InPhenix logo are trademarks of InPhenix Inc. All rights are reserved.

INPHENIX

Package Dimensions

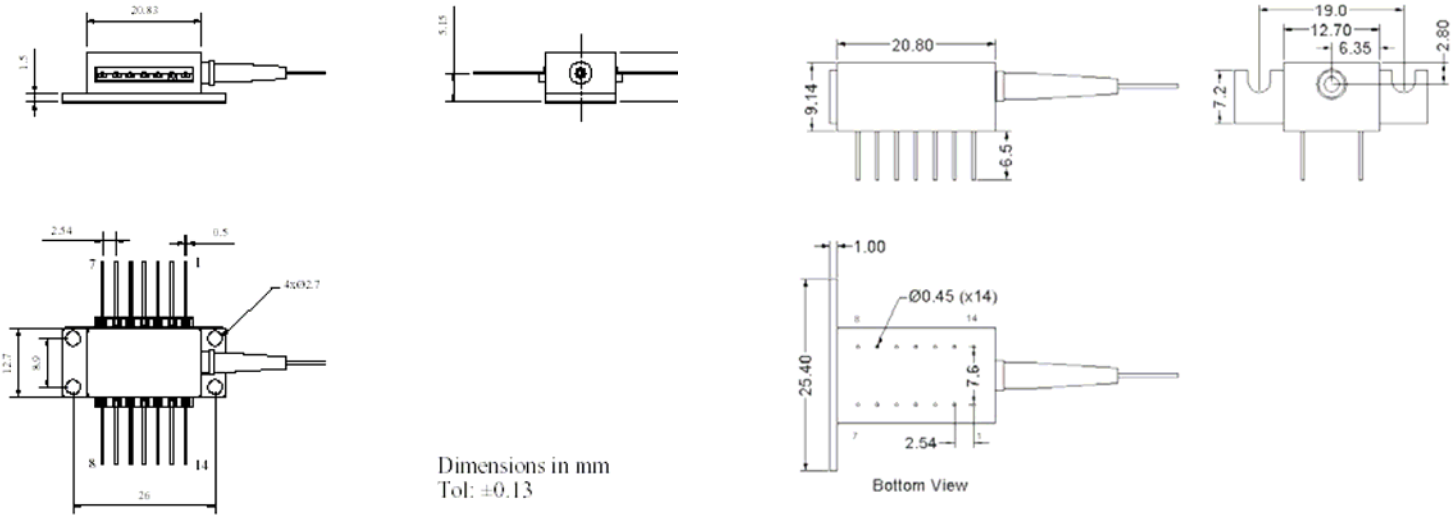

14-Pin BUT Package

14-Pin DIL Package

Pin Definition

14-pin BUT package				14-pin DIL package			
Pin	Function	Pin	Function	Pin	Function	Pin	Function
1	TEC (+)	8	NC	1	TEC (+)	8	NC
2	Thermistor	9	NC	2	NC	9	SLD (-)
3	NC	10	SLD (+)	3	NC	10	Case
4	NC	11	SLD (-)	4	NC	11	Thermistor
5	Thermistor	12	NC	5	SLD (+)	12	Thermistor
6	NC	13	Case	6	NC	13	NC
7	NC	14	TEC (-)	7	NC	14	TEC (-)

- If the SLD is ordered with a Back Facet Monitor, Pin 7 is PD-Cathode and Pin 8 is PD+Anode

All information contained herein is believed to be accurate and is subject to change without notification. No responsibility is assumed. Please contact InPhenix for more information. InPhenix and the InPhenix logo are trademarks of InPhenix Inc. All rights are reserved.

INPHENIX

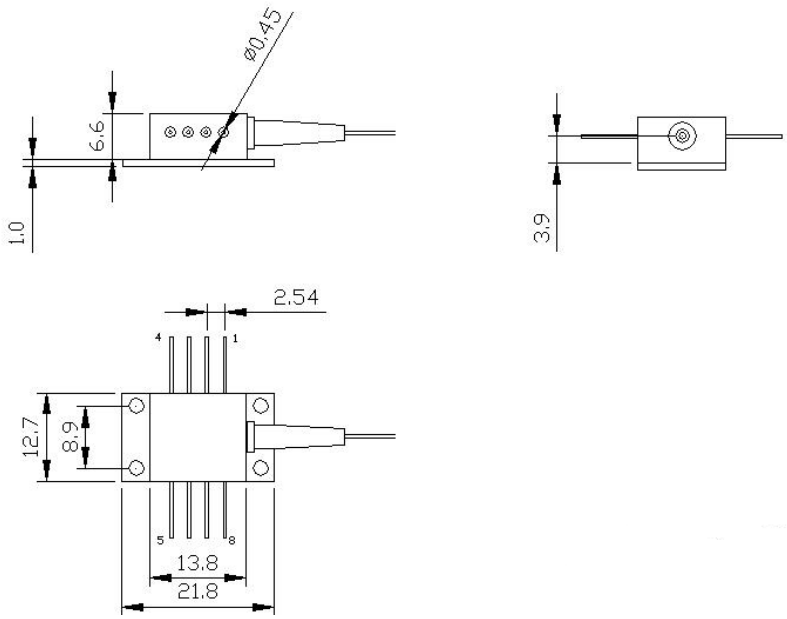

8-Pin BUT Package

Pin Definition

8-pin BUT package	
Pin	Function
1	TEC (+)
2	NC
3	NC
4	SLED (+)
5	SLED (-)
6	Thermistor
7	Thermistor
8	TEC (-)

All information contained herein is believed to be accurate and is subject to change without notification. No responsibility is assumed. Please contact InPhenix for more information. InPhenix and the InPhenix logo are trademarks of InPhenix Inc. All rights are reserved.

INPHENIX

Part Numbering System

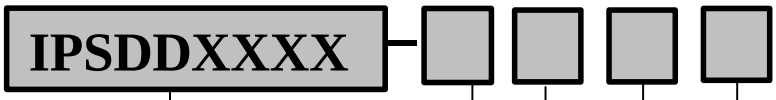

Model:
IPSDDXXXX: SLD Device

Package:
1: 14-pin DIL
2: 8-pin Butterfly
3: 14-pin Butterfly

Fiber Type:
1: SM Fiber
2: PM Fiber
3: MM Fiber

Jacket Type:
1: 900µm
2: 250µm tight buffer

Connector Type:
0: No Connector
3: FC/APC
4: FC/UPC
7: SC/APC
8: SC/UPC

Back Facet Monitor:
Available upon request

Example: IPSDD0805-1224: 850nm SLD in 14-pin DIL with 250µm tight buffered PM Fiber with FC/UPC connectors

Corporate Office
250 North Mines Rd
Livermore, CA 94551
Tel: 925.606.8809
Fax: 925.606.8810
www.inphenix.com
sales@inphenix.com

JAPAN DEVICE
日本デバイス株式会社
www.j-device.com
〒104-0028
東京都中央区八重洲2-10-8 八重洲ビル3F
営業部 sales@j-device.com
代表:03-6262-3424 営業:03-5542-1667