680nm~685nm 10mW SM Coaxial Pigtailed LD with Polarization Maintaining Fiber

680nm~685nm Fiber Coupled LD with PMF

WSLP-685-010m-PM-PD Wavespectrum Laser, Inc. www.wavespectrum-laser.com

685nm Pigtailed Diode Laser 10mW/PM Fiber Wavespectrum Laser, Inc

PARAMETER	SYMBOL	VALUE	UNIT
Reverse Voltage	V_r	2.0	V
Operating Temperature	T_{op}	-10~+60	℃
Storage Temperature	T_{stg}	-40 ~ +85	℃
Lead soldering temperature (10 sec.)	T_{ls}	260	℃

Features:

- 685nm
- PM Fiber
- Coaxial package
- Built-in PD

Applications:

- Medical laser treatment
- Other

Specifications	WSLP-685-010m-PM-PD		
	Min	Type	Max
Center Wavelength@25℃	670nm	685nm	700nm
Spectral Width (FWHM)	----	----	----
Output Power	----	10mW	----
Fiber Core	PM Fiber		
Slope Efficiency	0.4mW/mA	0.5mW/mA	----
Monitor Current	0.05mA	0.3mA	2.5mA
PD Reverse Voltage	----	30V	----
Fiber Connector	FC/ST/SMA905		
Fiber Length	----	80cm	100cm
Threshold Current (Typ.)	----	35mA	60mA
Operating Current (Typ.)	----	100mA	140mA
Operating Voltage	2.0V	2.7V	3.0V
Package Style	Coaxial		

Wavespectrum Laser,Inc.
www.wavespectrum-laser.com
wavespectrumlaser@gmail.com

Coaxial Package View

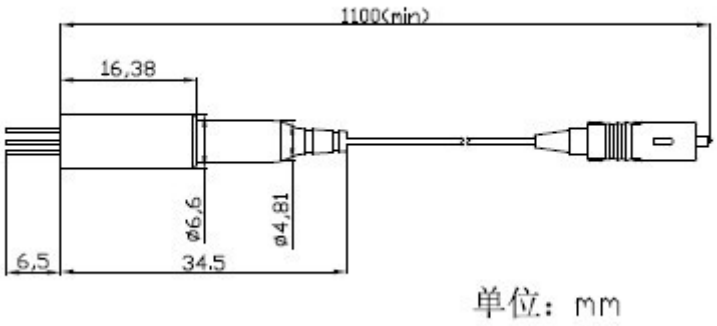

PIN Bottom View:

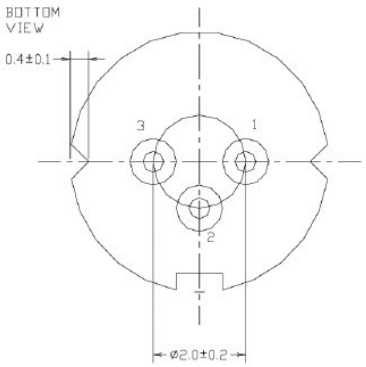

1	**PD(+)**
2	**LD(+)&PD(-)**
3	**LD(-)**

Electrically shorten LD module and store in non-extreme conditions.

Suggest using the constant current power supply.