670nm 5mw Fiber Coupled Laser Diode（LD）

670nm Pigtailed Coaxial Laser Diode with MMF

WSLP-670-005m-M-PD Wavespectrum Laser, Inc. www.wavespectrum-laser.com

670nm Pigtailed Diode Laser 5mW/MM Fiber Wavespectrum Laser, Inc

PARAMETER	SYMBOL	VALUE	UNIT
Reverse Voltage	V_r	2.0	V
Operating Temperature	T_{op}	-10~+70	℃
Storage Temperature	T_{stg}	-40 ~ +85	℃
Lead soldering temperature (10 sec.)	T_{ls}	260	℃

Features:

- 670nm
- MM Fiber
- Coaxial or Receptacle Package
- Built-in PD

Applications:

- Medical laser treatment
- Aiming
- Others

Specifications	WSLP-670-005m-M-PD		
	Min	Type	Max
Center Wavelength@25℃	660nm	670nm	680nm
Spectral Width (FWHM)	----	2.0nm	3.0nm
Output Power	----	5mW	----
Fiber Core	62.5um or 105um		
Slope Efficiency	0.4mW/mA	0.5mW/mA	----
Monitor Current	0.1mA	0.2mA	0.5mA
PD Reverse Voltage	----	30V	----
Fiber Connector	FC/ST/SMA905		
Fiber Length	----	80cm	100cm
Threshold Current (Typ.)	----	20mA	40mA
Operating Current (Typ.)	----	40mA	80mA
Operating Voltage	----	2.3V	2.6V
Package Style	Coaxial		
Recommended Operating Temperature	25℃		

Wavespectrum Laser,Inc.
www.wavespectrum-laser.com
wavespectrumlaser@gmail.com

Coaxial Package View

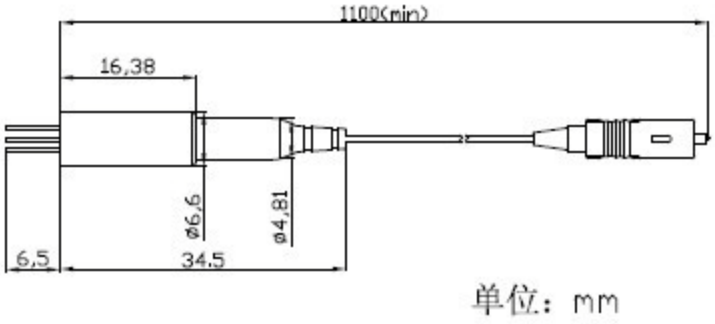

PIN Bottom View:

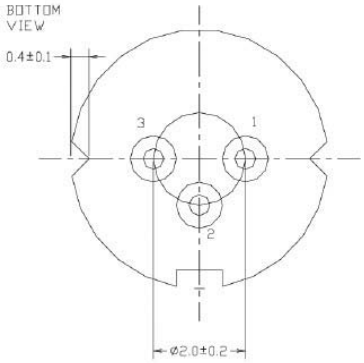

1	LD(-)
2	LD(+)&PD(-)
3	PD(+)

Electrically shorten LD module and store in non-extreme conditions.
Suggest using the constant current power supply.

ATTENTION

OBSERVE PRECAUTIONS
FOR HANDLING
ELECTROSTATIC
SENSITIVE
DEVICES