Advanced Fiber Resources (Hong Kong), Ltd.

1064 nm Polarization Maintaining Isolator (PMI Series)

Rev 11

The 1064 nm Polarization Maintaining Isolator is a micro optics device with low insertion loss, high isolation, high return loss, high extinction ratio and excellent environmental stability and reliability. It is ideal for amplifiers, fiber lasers and test instrument applications.

Specifications

Parameter	Unit	Single Stage		Dual Stage	
		Grade P	Grade A	Grade P	Grade A
Center Wavelength (λc)	nm	1064			
Typ. Peak Isolation	dB	38	36	55	52
Min. Isolation, λc, 23 ℃	dB	35	32	45	42
Typ. Insertion Loss, λc, 23 ℃	dB	1.5	1.6	2.4	2.6
Max. Insertion Loss, λc, all temperature	dB	2.0	2.2	3.4	3.6
Min. Extinction Ratio	dB	20	18	20	18
Min. Return Loss (Input/Output)	dB	55/50	55/50	55/50	55/50
Max. Average Optical Power	mW	300			
Max. Peak Power for ns Pulse	kW	10			
Max. Tensile Load	N	5			
Fiber Type		PM 980 Panda fiber			
Operating Temperature	℃	-5 to +50			
Storage Temperature	℃	-40 to +85			

*IL is 0.5 dB higher, RL is 5 dB lower, and ER is 2 dB lower for each connector added.

*Connector key is aligned to slow axis.

Package Dimensions

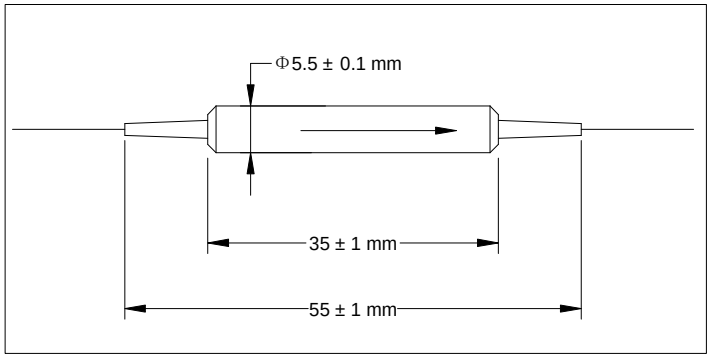

Ordering Information

PMI-06-①-②-③-④-⑤-⑥-⑦

①: Stage
1 - Single stage
2 - Dual stage

②: Grade
P - Premium
A - A grade

③: Connector Type
1 - FC/UPC
2 - FC/APC
3 - SC/UPC
4 - SC/APC
N - None
S - Specify

④: Fiber Jacket
B - 250 μm Panda fiber
L - 900 μm loose tube
S - Specify

⑤: Fiber Length
Q - 0.75 m
S - Specify

⑥: Working Axis
F - Fast axis blocked
B - Both axis working

⑦: Power Type
P - Pulse Application
C - Continuous Wave

JAPAN DEVICE 日本デバイス株式会社 E-mail sales@j-device.com
www.j-device.com Tel 03-6262-3424 Fax 03-6800-5883