1064 nm 3-port PM Circulator (PMCIR Series)

The 1064 nm Polarization Maintaining Optical Circulator is a compact, high performance lightwave component that routes incoming signals from Port 1 to Port 2, and incoming Port 2 signals to Port 3. This component provides high isolation, low insertion loss, high extinction ratio, and excellent environmental stability.

Specifications

Parameter	Unit	Type A	Type B
Center Wavelength (λc)	nm	1064	
Typ. Insertion Loss, λc, 23℃	dB	3.4	1.8
Max. Insertion Loss, λc, all temperature	dB	4.0	2.1
Typ. Isolation, λc, 23℃	dB	52	30
Min. Isolation, λc, 23℃	dB	45	25
Min. Extinction Ratio	dB	20	
Min. Crosstalk	dB	50	
Min. Return Loss	dB	50	
Max. Optical Power (Continuous Wave)	mW	300	
Fiber Type		PM 980 Panda fiber	
Package Type		Circulator STD	
Max. Tensile Load	N	5	
Operating Temperature	℃	-5 to +50	
Storage Temperature	℃	-40 to +85	

*IL is 0.5 dB higher, RL is 5 dB lower, and ER is 2 dB lower for each connector added. Connector key is aligned to slow axis.
*The optical path is aligned to slow axis, and fast axis is blocked.

1064 nm 4-port PM Circulator (DPMCIR Series)

FULL Specification Available on the WEB

Parameter	Unit	Type A	Type B
Center Wavelength (λc)	nm	1064	
Typ. Insertion Loss, λc , 23 ℃	dB	3.8	2.4
Max. Insertion Loss, λc , all temperature	dB	4.2	2.8
Typ. Isolation, λc, 23 ℃	dB	52	30
Min. Isolation, λc, 23 ℃	dB	45	20
Min. Extinction Ratio	dB	20	20
Min. Diectivity (1 -> 3, 2 -> 4)	dB	50	
Min. Return Loss	dB	50	
Max. Optical Power (Continuous Wave)	mW	300	

*IL is 0.5 dB higher, RL is 5 dB lower, and ER is 2 dB lower for each connector added. Connector key is aligned to slow axis.
*The routing path: Type A: 1 -> 2, 2 -> 3, 3 -> 4; Type B: 1 -> 2, 2 -> 3, 3 -> 4, 4 -> 1.
*The optical path is aligned to slow axis, and fast axis is blocked.
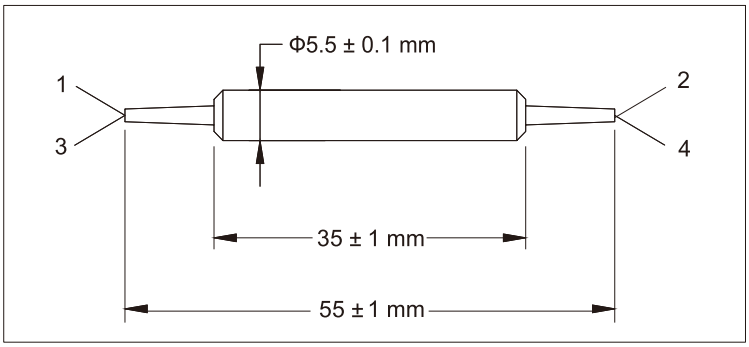
Package Dimensions