685nm 15mW Receptacle Laser Diodes (LD) Module

680nm~685nm MM Receptacle LD

WSLR-685-015m-M-PD Wavespectrum Laser, Inc. www.wavespectrum-laser.com

685nm Receptacle Diode Laser 15mW Wavespectrum Laser, Inc

PARAMETER	SYMBOL	VALUE	UNIT
Reverse Voltage	V_r	2.0	V
Operating Temperature	T_{op}	-10~+60	℃
Storage Temperature	T_{stg}	-40 ~ +85	℃
Lead soldering temperature (10 sec.)	T_{ls}	260	℃

Features:

- 685nm
- MM Fiber
- Receptacle package
- Built-in PD

Applications:

- Medical laser treatment
- Other

Specifications	WSLR-685-015m-M-PD		
	Min	Type	Max
Center Wavelength@25℃	670nm	685nm	700nm
Spectral Width (FWHM)	----	----	----
Optical Fiber Output Power (After Fiber)	----	15mW	----
Fiber Specification	62.5um , 105um（or more）		
	0.22 (or more)		
Slope Efficiency	0.4mW/mA	0.5mW/mA	----
Monitor Current	0.05mA	0.3mA	2.5mA
PD Reverse Voltage	----	30V	----
Ferrule Type	FC		
Other Customized Ferrule Type	SC , ST		
Threshold Current (Typ.)	----	35mA	60mA
Operating Current (Typ.)	----	100mA	140mA
Operating Voltage	2.0V	2.7V	3.0V
Package Style	Receptacle		
Recommended Operating Temperature	25℃		

Wavespectrum Laser,Inc.
www.wavespectrum-laser.com
wavespectrumlaser@gmail.com

FC Connector Receptacle Package View

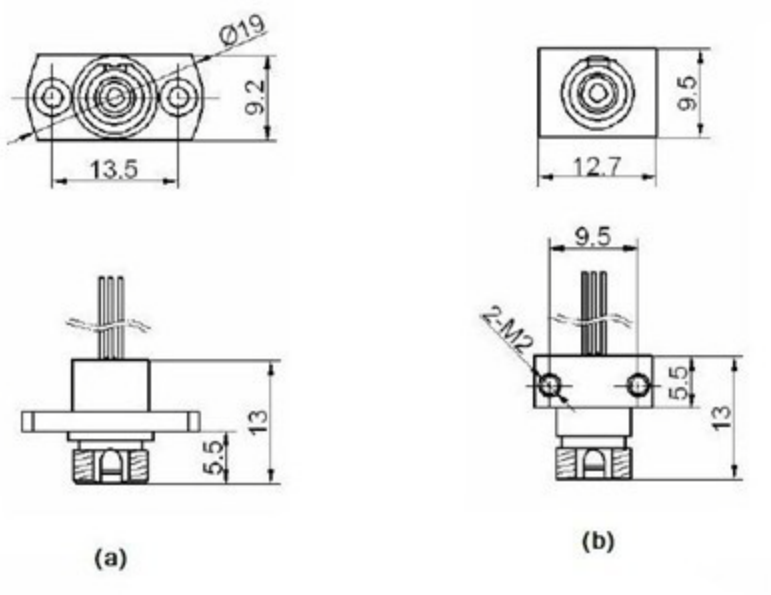

PIN Bottom View:

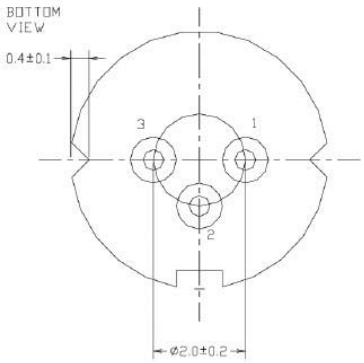

1	PD(+)
2	LD(+)&PD(-)
3	LD(-)

Electrically shorten LD module and store in non-extreme conditions.
Suggest using the constant current power supply.

ATTENTION

OBSERVE PRECAUTIONS
FOR HANDLING
ELECTROSTATIC
SENSITIVE
DEVICES