976nm~980nm 5mW Receptacle Laser Diode (LD) Module
980nm SM Receptacle Package LD with 9um SMF

WSLR-980-005m-9-PD Wavespectrum laser inc. www.wavespectrum-laser.com

980nm Receptacle Diode Laser 5mW Wavespectrum Laser, Inc

PARAMETER	SYMBOL	VALUE	UNIT
Reverse Voltage	V_r	2.0	V
Operating Temperature	T_{op}	-10~+40	℃
Storage Temperature	T_{stg}	-40 ~ +85	℃
Lead soldering temperature (10 sec.)	T_{ls}	260	℃

Features:

- 980nm
- 9um Fiber
- Receptacle Package
- Built-in PD

Applications:

- Medical laser treatment
- Communication
- Others

Specifications	WSLR-980-005m-9-PD		
	Min	Type	Max
Center Wavelength@25℃	970nm	980nm	990nm
Spectral Width (FWHM)	----	2.0nm	3.0nm
Optical Fiber Output Power (After Fiber)	----	5mW	----
Fiber Specification	9 um Fiber		
Slope Efficiency	0.8mW/mA	0.9mW/mA	----
Monitor Current	----	0.1mA	----
PD Reverse Voltage	----	30V	----
Ferrule Type	FC		
Other Customized Ferrule Type	ST , SC		
Threshold Current (Typ.)	----	35mA	45mA
Operating Current (Typ.)	----	70mA	90mA
Operating Voltage	----	2.0V	2.5V
Package Style	Receptacle		

Wavespectrum Laser,Inc.
www.wavespectrum-laser.com
wavespectrumlaser@gmail.com

FC Connector Receptacle Package View

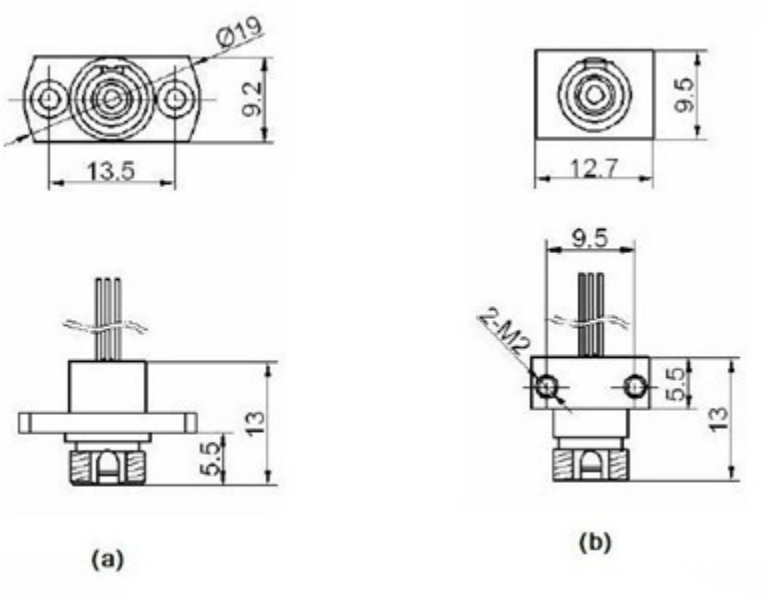

PIN Bottom View:

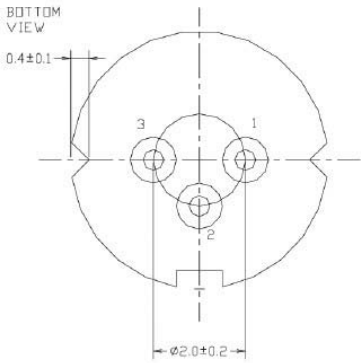

1	LD(-)
2	LD(+)&PD(-)
3	PD(+)

Electrically shorten LD module and store in non-extreme conditions.
Suggest using the constant current power supply.

ATTENTION

OBSERVE PRECAUTIONS
FOR HANDLING
ELECTROSTATIC
SENSITIVE
DEVICES