Advanced Fiber Resources (Hong Kong), Ltd.

Hermetic Fiber Feedthrough (FFT Series)

Spec. Reivew No.: SR24161 Date: Feb. 17, 2022

Description

AFR provides hermetic fiber feedthrough by using gold plated metal ferrule to fiber cables. This feature guarantee excellent hermeticity for various applications. Choice of fiber from SM, MM, polarization maintaining fiber, single fiber or ribbon fiber available upon request. It is commonly used in submarine networks regime.

Key Features

- Hermetic Fiber Feedthrough
- High Reliable Long Life Span

Applications

- Long-Haul Submarine Transmission
- WSS

Specifications

Parameter	Unit	Value
Number of Channel	CH	8/16/24/36/48/72
Max. Insertion Loss @1550nm @ 23 ℃	dB	≤ 0.15
PDL @1550nm @ 23 ℃	dB	≤ 0.05
Return loss @1550nm @ 23 ℃	dB	≥ 60
Helium leak rate	atm.cc/s	≤ 1E-9
Water Pressure	MPa	≥ 80
Fiber type		G652D Corning SMF-28 Ultra 200kpsi
Operating wavelength	nm	1525 - 1570
Operating Humidity	% RH	≤ 90
Operating Temperature	℃	- 30 to + 70
Continuous optical power handling	W	≤ 2
Storage Temperature @ ≥ 3 months	℃	- 40 to + 85
Storage Temperature @ ≥ 28 years	℃	- 10 to + 50
Storage Humidity @ ≥ 28 years	% RH	≤ 95
Storage air presure @ absolute pressure	Kpa	≤ 500
Longitudinal fiber pull strength	N	≥ 5
Functional lifetime	Years	≥ 28
Connectors		None

Package Dimensions

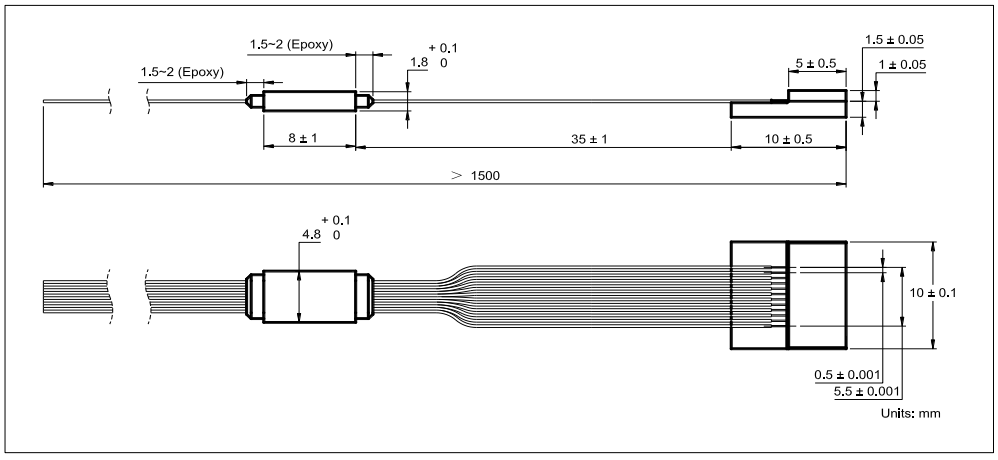

JAPAN DEVICE 日本デバイス株式会社 E-mail sales@j-device.com
www.j-device.com Tel 03-6262-3424 Fax 03-6800-5883

Reliability items passed the verification

Test		Test Method	Condition	Sampling	Result
Mechanical Shock		IEC 60068-2-27	Condition A for Pass/Fail: 200g, 2.0 ms, 6 directions (on 3 axes), 5 times/direction	20pc	Pass
Non-operational Vibration		IEC 60068-2-6	Sinusoidal, 20g, 10 to 2000 to 10 Hz, 4 min/cycles, 4 cycles/axis, 3 axes		
Random vibration		MIL-STD-883E	Test condition 1，3 axis, 15min/axis, 6.06 /9/16.4 Grms		
Thermal Shock		MIL-STD-883, Method 1011	Temperature Range: ΔT = 125 °C, air-air - 40~85 °C	11pc	Pass
			Dwell Times: ≥ 15 minutes at temperature extremes		
			Transfer Time: ≤ 10 seconds		
			Cycles: 15		
Fiber Integrity	Straight pull	TIA/EIA-455-6	For Pass/Fail: 0.5 kg, 1 minute, 5 times.	3pc	Pass
	Side pull	GR-326-CORE	For Pass/Fail: 0.25 kg, 90° angle, 4 directions, 5 times/direction, 22 to 28 cm from device housing		
	Twist	TIA/EIA-455-36	0.5 kg, 10 cycles from 0° to 90° to - 90° to 0°, 3 cm from device housing or the end of the strain relief boot		
	Helium leak test	ASTM E498/499	< 1x E^{-9} atm.cc/s at a Helium differential pressure of 5MPa with the device mounted in the “in-service” condition		
	Destructive straight pull	TIA/EIA-455-6	For info: Quasistatic increase loading until break, strain rate 5%.		
Dry Heat		GR-1209/1221-CORE	Temperature: 85 °C (± 2 °C) or the maximum storage temperature	11pc	Pass
			Humidity: < 40% RH		
			Test Duration: 1000 hours		
			Data shall be taken initially, and then at 168-, 500-, 1000-, 2000-hour intervals.		
Low Temperature Storage		GR-1209/1221-CORE	Temperature: - 20 °C (± 5 °C) or the minimum storage temperature		
			Humidity: Uncontrolled		
			Test Duration: 1000 hours		
			Data shall be taken initially, and then at 168-, 500-, 1000-, 2000-hour intervals.		
Thermal Cycling		IEC 60068-2-14	Temperature: - 40 °C to 85 °C (± 2 °C)		
			Dwell Time at extremes: ≥ 15 minutes		
			Cycles: 500 for Pass/Fail, 1000 for info		
Damp Heat		IEC 60068-2-78	85 °C/85%RH	11pc	Pass
			2000 hours for Pass/Fail, 5000 hours for info		
Hydraulic Test		NA	83MPa pressure holding, 720 hours	3pc	Pass
			100MPa pressure holding, 48 hours		
Optical Power Handling		TIA-445-229	2W, 1550nm, 500hrs, 23 ℃	200 Channels	Pass

Ordering Information

FFT - ①① - ② - **SUB**

①①: Channels

XX - XX channels

② Fiber Type

1 - G652D Corning SMF-28 Ultra 200kpsi